NOTES:

1. UNLESS OTHERWISE SPECIFIED, DIMENSIONS ARE MM (MILLIMETERS).
2. MATERIAL: 316/317 STAINLESS STEEL PER ASTM A240.
3. CERTIFICATE OF CONFORMANCE REQUIRED FOR MATERIAL.
4. 1.6µm Ra ALL OVER PER ANSI/ASME B46.1 UNLESS OTHERWISE SPECIFIED.
5. PART TO BE CLEAN AND FREE OF ALL DIRT, DEBRIS, OIL, ETC.
6. 100% INSPECTION AND DOCUMENTATION, FOR ALL DRAWING REQUIREMENTS, REQUIRED FOR EACH INDIVIDUAL PART PRODUCED.
7. PNEUMATIC TEST PER MSTR-MD-130-1.
8. BAG, SEAL AND TAG PART PER SAE-AS478-35D. MARK ATTACHED TAG WITH DRAWING NUMBER, REVISION LEVEL, AND SERIAL NUMBER. EXAMPLE: MSTR-MD-160 REV - 001

REVISION HISTORY				
ZONE	REV.	DESCRIPTION	DATE	APPROVED
D8	A	ADDED NEW NOTE 7	04/20/18	JA

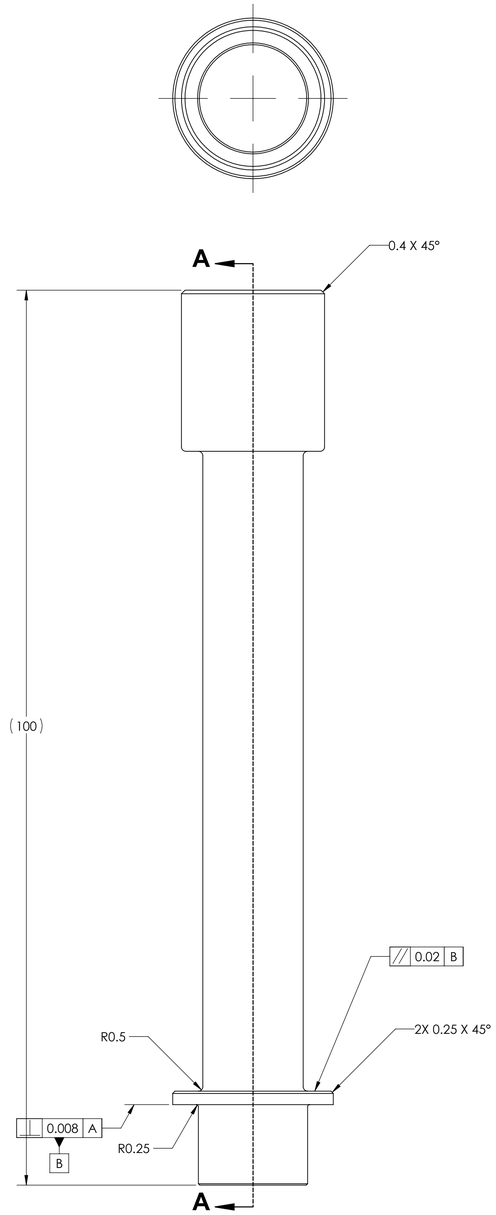

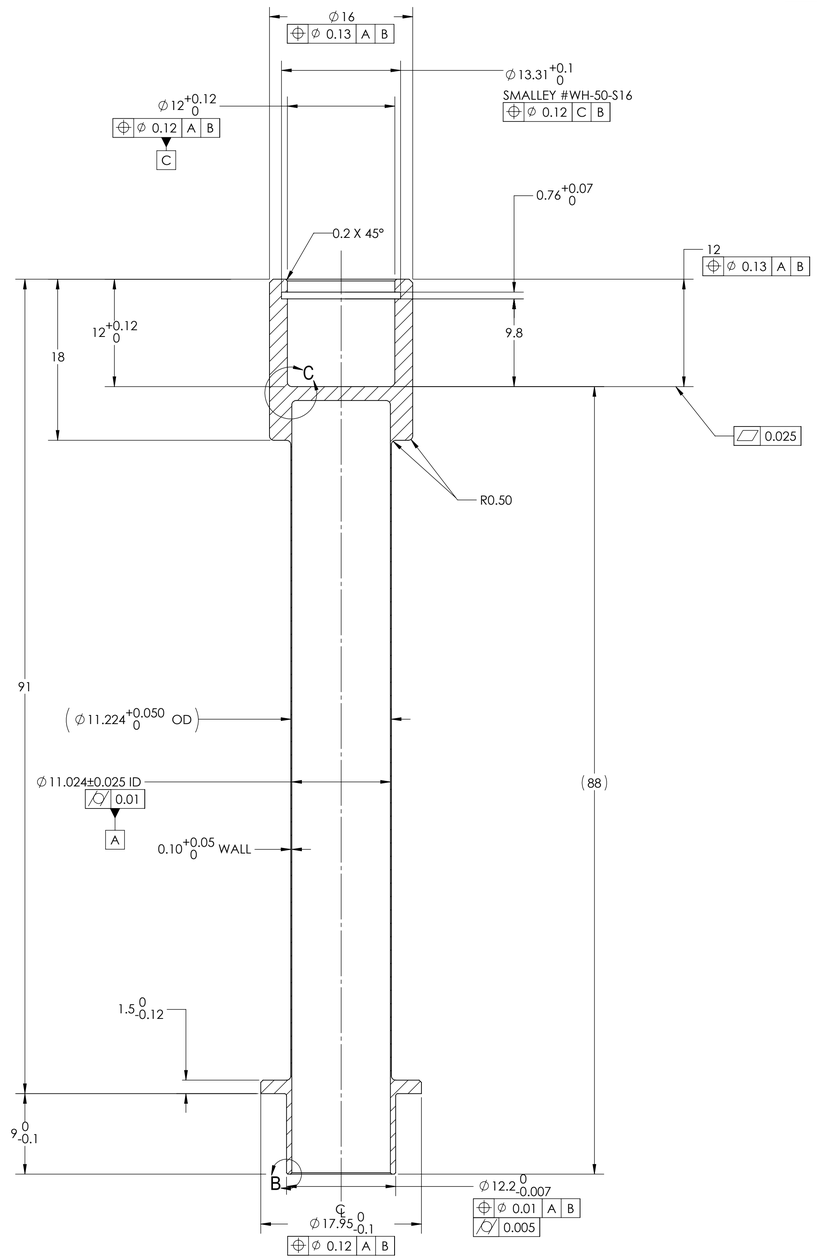

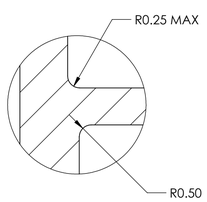

DETAIL C
SCALE 8 : 1

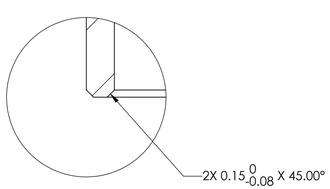

DETAIL B
SCALE 16 : 1

SECTION A-A

		UNLESS OTHERWISE SPECIFIED DIMENSIONS ARE MM (MILLIMETERS) 0.5-6 ±0.1 30-120 ±0.3 315-1000 ±0.8 6-30 ±0.2 120-315 ±0.5 ANGLE 0° ±30' BREAK EDGES: 0.5 INTERPRET DIMENSIONS AND TOLERANCES PER ASME Y14.5M - 1994	RELEASE DATE 09-10-2018	NATIONAL AERONAUTICS AND SPACE ADMINISTRATION JOHN H. GLENN RESEARCH CENTER LEWIS FIELD, CLEVELAND, OHIO
			DESIGNER N. Schifer	TITLE HEATER HEAD ONE PIECE
			ENGINEER	
MSTR-MD-130	MINI STIRLING ASSY		STATE RELEASED	
NEXT ASSY	USED ON	THIRD ANGLE PROJECTION	WINDCHILL PRODUCT	SIZE D · CAGE CODE 1QFP5 · DWG NO MSTR-MD-160 · REV A
APPLICATION				
CONTRACTOR:	GESS3 TEAM		MODEL	
CONTRACT NO:	NNC12BA01B		MODEL NAME	SCALE: 3:1 · SHEET 1 OF 1

REV A
SR
DWG NO MSTR-MD-160